PIXIE 2: 30M CW

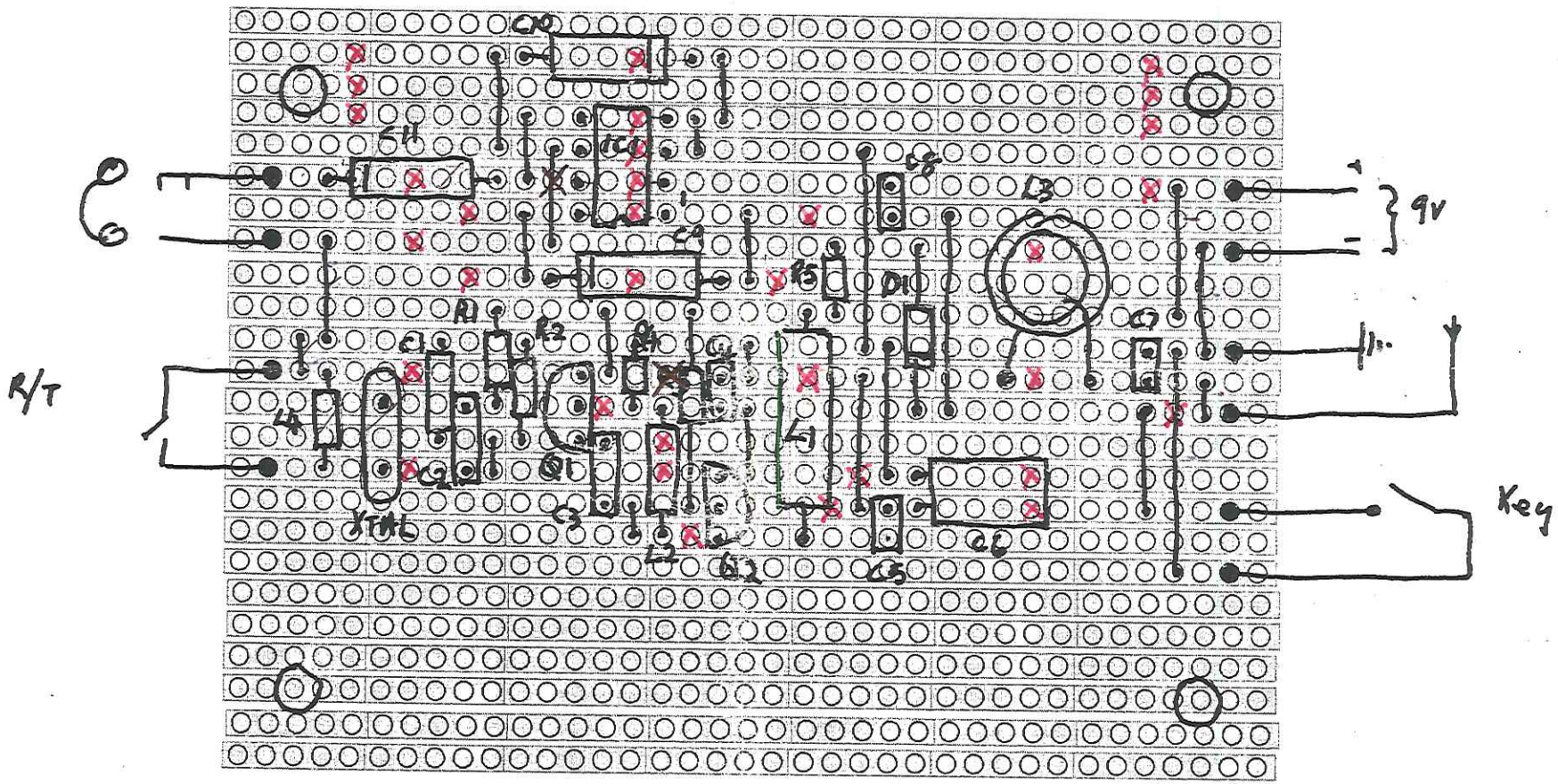

PNIE 11

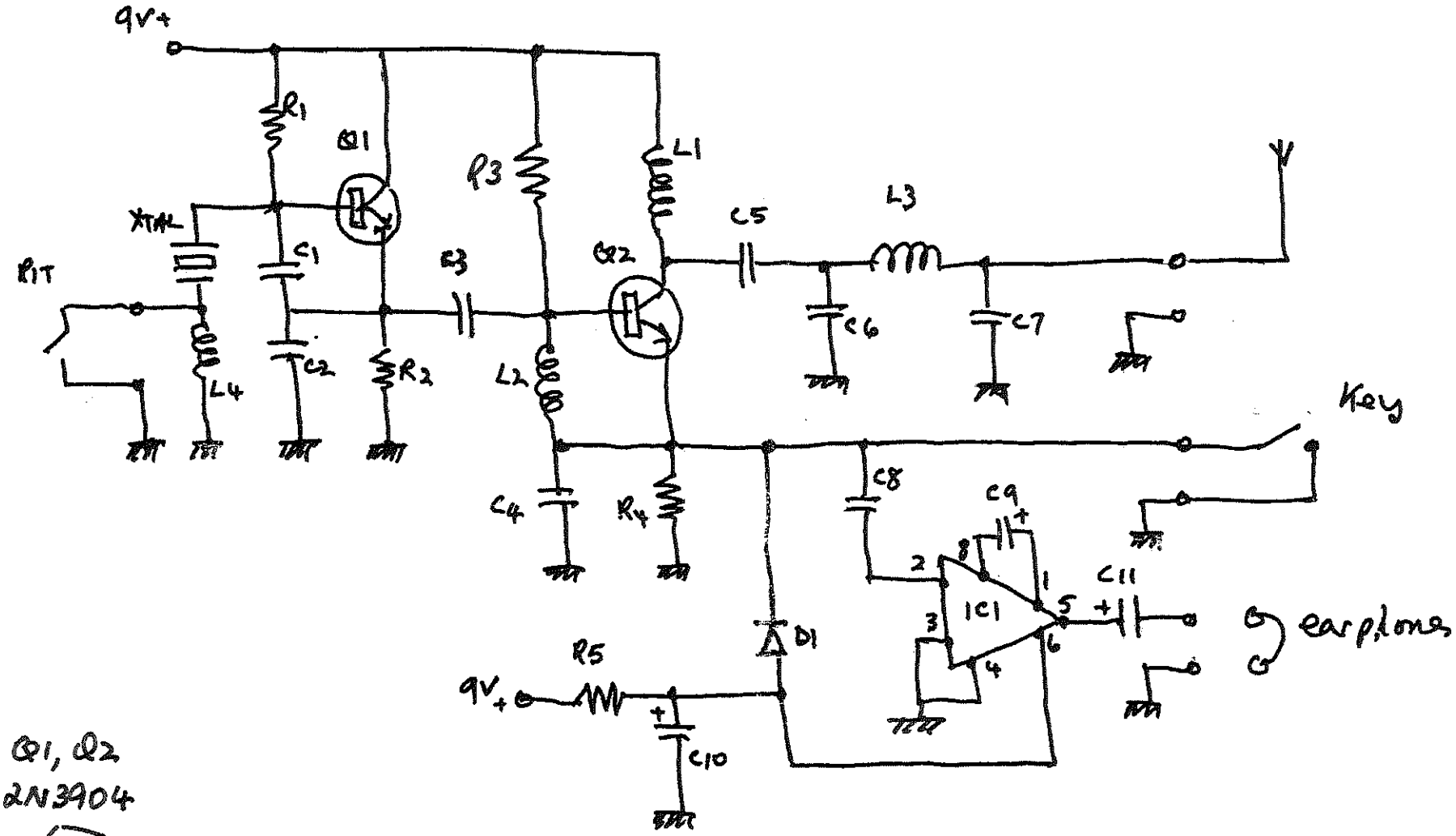

Q1, Q2
2N3904

IC1 = LM386N-1

Component Values. PIXIE II 30M.

C1	100 pF	R1	47 k
C2	100 pF	R2	1.5 k
C3	100 pF	R3	33 k
C4	0.05 μF	R4	10 k
C5	0.01 μF	R5	1 k
C6	~~820~~ 330 pF	D1	1N914
C7	~~820~~ 680 pF	Q1	2N3904
C8	0.1 μF	Q2	2N3904
C9	10 μF	IC1	LM386
C10	10 μF	XTAL	10.106 MHz
C11	10 μF		
L1	22 μH		
L2	100 μH		
L3	1.0 μH	[19 turns 26 SWG T37-6 micrometals Toroid.]	
L4	4.7 μH		